Conveyor
Technologies
Ltd.

440 Milford Parkway
Milford, OH 45150-9104

PHONE (513) 248-0663
FAX (513) 248-0685
E-mail: mail@ConveyorTechLtd.com

2 Axis Adjustable
Standard Guide Rails & Wear Strip Mounting Arrangements

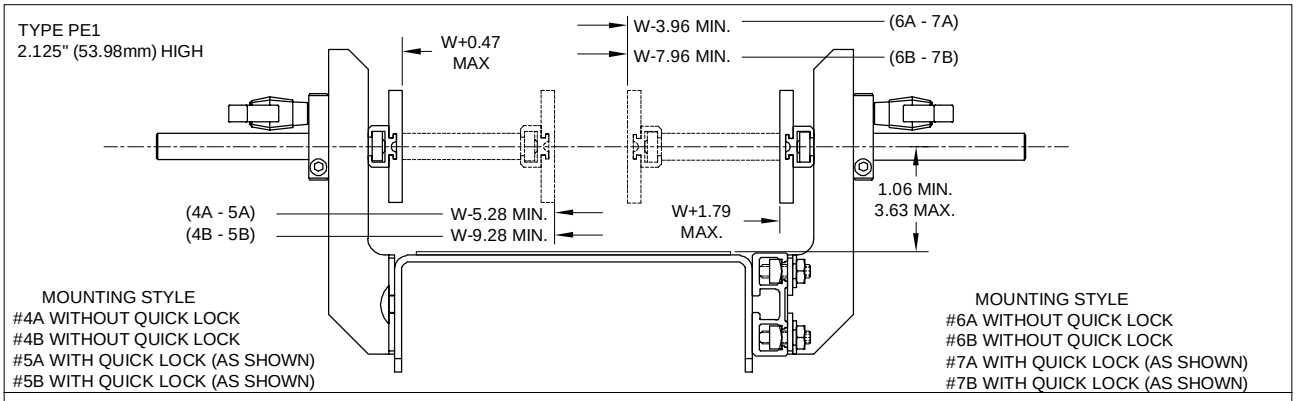

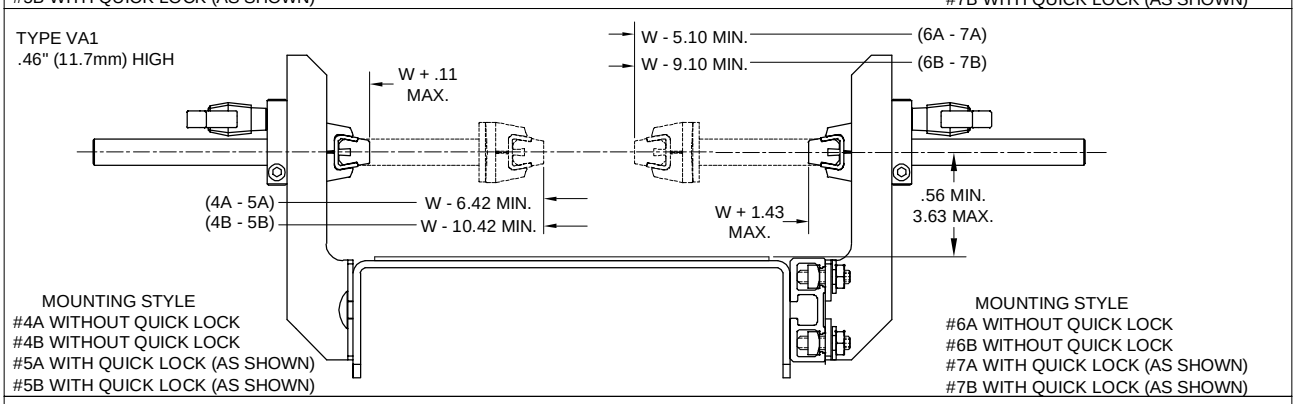

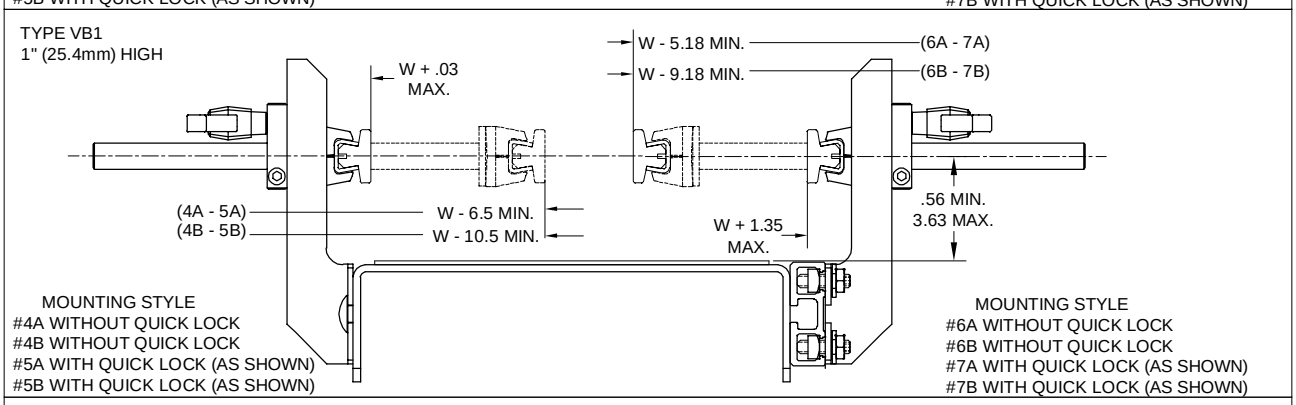
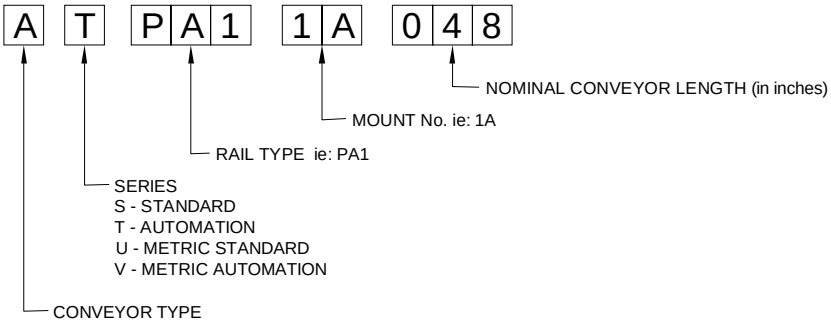
ORDERING INSTRUCTIONS